Control head for decentralised automation of ELEMENT process valves

- Contact-free inductive valve position registration (Teach-In function)
- Coloured illuminated status display
- Integrated control air routing in the actuator
- Fieldbus interface AS interface, IO-Link or Bürkert system bus (büS)
- With ATEX II cat. 3G/D / IECEx approval

Product variants described in the data sheet may differ from the product presentation and description.

Can be combined with

Type 2100
Pneumatically operated 2/2 way angle seat valve ELEMENT

Type 2101
Pneumatically operated 2/2 way globe valve ELEMENT

Type 2103
2/2 way diaphragm valve with pneumatic stainless steel actuator (Type ELEMENT)

Type 2104
T-diaphragm valve with pneumatic actuator in stainless steel (Type ELEMENT)

Type 2105
Tank bottom diaphragm valve with pneumatic actuator in stainless steel (Type ELEMENT)

Type 2106
Pneumatically operated 3/2 way seat valve ELEMENT

Type description

The control head Type 8691 is designed for decentralized automation of ELEMENT Type 21xx pneumatic process valves. The registration of the valve position is done through a contact-free analogue sensor element, which automatically recognises and saves the valve end position through the Teach function during start-up. The integrated pilot valve controls single or double-acting actuators. As an option a communication interface, AS-Interface, IO-Link or büS (based on CANopen) can be chosen.

The design of the control head and the actuator enables an internal control air routing without external tubings. Besides the electrical position feedback, the status of the device is shown directly on the control head itself through coloured powerful LEDs, even in difficult ambient conditions.

The housing is easy to clean and features proven IP protection and chemically resistant materials for use in hygienic processing in food, beverage and pharmaceutical industries. Focused on wash down applications, the IP protection of the housing is supported by a positive pressure inside the control head. Combined with Bürkert ELEMENT actuators, the pneumatic actuating system enables spring chamber aeration that avoids actuator chamber contamination from the environment.

DTS 1000110599 EN Version: Z Status: RL (released | freigegeben | validé) printed: 08.09.2021

© Christian Bürkert GmbH & Co. KG, Subject to alteration

Visit product website

Table of contents

1. General technical data 3

1.1. Control head Type 8691 ... 3
1.2. With fieldbus communication: AS-Interface ... 4
1.3. With digital communication: IO-Link ... 5
1.4. With digital communication: Bürkert system bus (büS) ... 5
1.5. Functional overview Control head Type 8691 ... 6

2. Materials 7

2.1. Material specifications ... 7

3. Dimensions 7

3.1. Mounting on process valve ELEMENT Type 21xx ... 7

4. Device/Process connections 8

4.1. Electrical connections ... 8
Without fieldbus communication 24 V DC ... 8
Cable gland connection ... 8
4.2. AS-Interface connection ... 9
4.3. Bürkert system bus (büS) connection ... 9
4.4. IO-Link connection ... 9

5. Product installation 10

5.1. Combination options with pneumatic process valves ... 10

6. Ordering information 11

6.1. Bürkert eShop – Easy ordering and quick delivery ... 11
6.2. Bürkert product filter ... 11
6.3. Ordering chart ... 12
6.4. Ordering chart accessories ... 12
Standard accessories ... 12
Adapter kits ... 12

DTS 1000110599 EN Version: Z Status: RL (released | freigegeben | validé) printed: 08.09.2021

1. General technical data

1.1. Control head Type 8691

Product properties	
Dimensions	Detailed information can be found in chapter “3. Dimensions” on page 7.
Material	
Body	PPS, stainless steel
Seals	EPDM
Cover	PC
Operation	
Operating keys	A key to operate the Teach-Function
Service interface	Connected to PC via USB connection
Configuration tool	Bürkert Communicator
Commissioning	
Setting valve end positions	Automatic using Teach-Function
Manual operation of pilot valve	Yes
Status display	
Display of device and valve status	High-power LEDs (colours individually adjustable)
Communication	
Fieldbus	AS-Interface, IO-Link
Digital	Bürkert system bus (büS) (based on CANopen)
Performance data	
Functional overview	Detailed information can be found in chapter “1.5. Functional overview Control head Type 8691” on page 6.
Position sensor/Position feedback	
Analogue position sensor	Inductive (contactless) with self-adjusting switching points (PNP) (NPN on request)
Stroke range for linear actuators	
Valve spindle	2.5…45 mm
Electrical data	
Operating voltage	24 V DC ± 10 % UL: NEC Class 2
Protection class	3 acc. to DIN EN 61140
Residual ripple	10 %
Power consumption	< 2 W
Electrical connection	
Multipole version	M12, 8 pin resp. 4-, or 5 pin acc. to device version (see “4. Device/Process connections” on page 8)
Cable gland version	M16 × 1.5 (Terminal range 5…10 mm) With screw terminals for cable cross sections 0.14…1.5 mm^2
Pneumatic data	
Control medium	Neutral gases, air, quality class acc. to ISO 8573 - 1
Dust content	Class 7 (< 40 µm particle size)
Particle density	Class 5 (< 10 mg/m^3)
Pressure dew point	Class 3 (< - 20 °C)
Oil content	Class X (< 25 mg/m^3)
Air supply filter	Exchangeable
Mesh size	~0.1 mm
Supply pressure	3…7 bar[1.)]
Pilot air ports	Threaded connection G ⅛, stainless steel
Positioning system	
Circuit function	Single and double-acting
Air capacity	250 l_N/min (for aeration and ventilation) (Q_{Nn} value acc. to definition at pressure drop from 7 to 6 bar absolute)
Actuator series/size	Type 21xx, Ø actuator 70/90/130 mm

DTS 1000110599 EN Version: Z Status: RL (released | freigegeben | validé) printed: 08.09.2021

Approvals and certificates	
Conformity	EMC directive 2014/30/EU
Ignition protection	II 3D Ex tc IIIC T135 °C Dc II 3G Ex ec IIC T4 Gc
UL	cULus Certificate: E238179
ATEX	II 3D Ex tc IIIC T135 °C Dc II 3G Ex ec IIC T4 Gc Certificate: BVS 14 ATEX E 008 X
IECEx	Ex tc IIIC T135 °C Dc Ex ec IIC T4 Gc Certificate: IECEx BVS 14.0009 X
Environment and installation	
Installation and mechanical data	
Installation position	As required, preferably with actuator in upright position
Valve actuator (type, size)	ELEMENT Type 21xx (Actuator size Ø70/90/130 mm)
Adapter kits	Detailed information can be found in chapter **"Adapter kits" on page 12**.
Operating conditions	
Ambient temperature	
With pilot valve	-10…+55 °C
Without Pilot valve	-20…+60 °C
Degree of protection	IP65/IP67 acc. to EN 60529, 4X acc. to NEMA 250 Standard
Operating altitude	Up to 2000 m above sea level

1.) The supply pressure applied must be 0.5 to 1 bar above the minimum required pilot pressure of the valve actuator.

1.2. With fieldbus communication: AS-Interface

Product properties	
Profile	S-B.A.E (A/B-Slave, max. 62 slaves/master) certificate no. 77601 acc. to Specification V3.0 Master class: M3, M4 S-B.F.F (standard slave, max. 31 slaves/master) Master class: M0, M1, M2, M3, M4
Electrical data	
Operating voltage	26.5…31.6 V DC, UL: NEC Class 2
Via Bus cable	Acc. to specification
Isolation from bus signal	On request
Protection class	3 acc. to DIN EN 61140
Power consumption	
Max. current consumption	120 mA
Current consumption in standard operation	90 mA (acc. to current reduction; valve +1 end position achieved)
Device with external power supply	External power supply (The power supply unit must contain one secured disconnection acc. to IEC 364-4-41 (PELV or SELV))
Max. current consumption	55 mA (acc. to current reduction ≤30 mA)
Max. current consumption from ASI	55 mA
Electrical connection	M12, 4 pin
Outputs	
Contact rating	≤1 W via AS-Interface
Watchdog function	Integrated
Input	
Sensor operating voltage	24 V ±10 % (via AS-Interface)
Current carrying capacity	≤50 mA short circuit proof
Switching levels, high	≥10 V
Input current, high	Limited to 6.5 mA
Input current, low	≤1.5 mA
Programming data	See **operating manual** ▸

DTS 1000110599 EN Version: Z Status: RL (released | freigegeben | validé) printed: 08.09.2021

1.3. With digital communication: IO-Link

Electrical data	
Electrical connection	M12 × 1, 4 pin
IO-Link Specification	V1.1.2
SIO-Mode	Yes, optionally 2xDO (end positions), or 1xDI+ 1xDO (valve switch + an end position)
VendorID	0x0078, 120
DeviceID	See IODD file (The IODD file can be downloaded from our **website** ▶, see Software > Device Description Files A.04)
Transmission rate	230.4 kbit/s
Data storage	Yes
Max. cable length	20 m
Port class	A
Power supply	Via IO-Link
Operating voltage	18…30 V DC (acc. to specification)
Max. current consumption	135 mA@18 V
Current consumption in standard operation	110 mA@18 V (acc. to current reduction Pilot valve + 1 end position achieved)
Frame type in operation	TYPE_2_V
Min. cycle time	1 ms

1.4. With digital communication: Bürkert system bus (büS)

Electrical data	
Operating voltage	18…30 V DC (acc. to Specification)
Electrical connection	M12 × 1, 5 pin, A-coded
Current consumption	Max. 150 mA

DTS 1000110599 EN Version: Z Status: RL (released | freigegeben | validé) printed: 08.09.2021

1.5. Functional overview Control head Type 8691

Function	Version				
	24 V	IO-Link	AS-Interface Stand-ard-Slave	AS-Interface A/B-Slave	büS/ CANopen
Basic functions					
Teach-Function position sensor	x	x	x	x	x
Manual override pilot valve (mechanical)	x	x	x	x	x
Manual override pilot valve (electrical)		x			x
Position feedback valve OPEN/CLOSED	x	x	x	x	x
Feedback signal current valve position (intermediate position)		x			
Optical position feedback/status display high-performance LEDs	x	x	x	x	x
Inversion of LED colours (colour of optical feedback)	x	x	x	x	x
Selection of LED display mode		x			x
Diagnostic LEDs		x	x	x	x
Selection or deactivation of the optical display		x			x
Date storage function		x			
Locating function		x			x
büS communication interface (Burkert System Bus)					x
büS service interface (PC-Tool Bürkert Communicator)		x			x
Diagnosis					
Process valve switching cycles counter with definable limit value		x			x
Pilot valve switching cycles counter		x			x
Operating hours counter with definable limit value		x			x
Process valve counter for opening/closing timeout		x			x
Travel accumulator with definable limit value		x			x
Active diagnostic messages (feedback when limit values are exceeded)		x			x
Diagnosis reset command (to reset counter values)		x			x
Error feedback signal position sensor		x	x	x	x
Self-monitoring control head with automatic error message		x			x
Feedback Teach error	x	x	x	x	x
Feedback over-temperature		x			x
Feedback communication error		x	x	x	x
Feedback for opening/closing timeout		x			x
Tolerance for switching time overrun		x			x
Error detection if the setpoint position is not reached (end positions not reached)		x			x
Tolerance band of end position detection		x			
Detection of under-voltage and over-voltage of the power supply		x			x
Log function for error cases		x			x
Parameterization					
Enable/disable safety position in case of setpoint or bus error		x			x
Selecting and setting the SIO mode		x			
Selection of digital outputs (end positions) PNP, NPN	x	x			
Selection of digital outputs (end positions) PNP, NPN, PP		x			
Deactivation of local operation (Lock function)		x			x
Reset function (reset to factory setting)		x			x

DTS 1000110599 EN Version: Z Status: RL (released | freigegeben | validé) printed: 08.09.2021

2. Materials

2.1. Material specifications

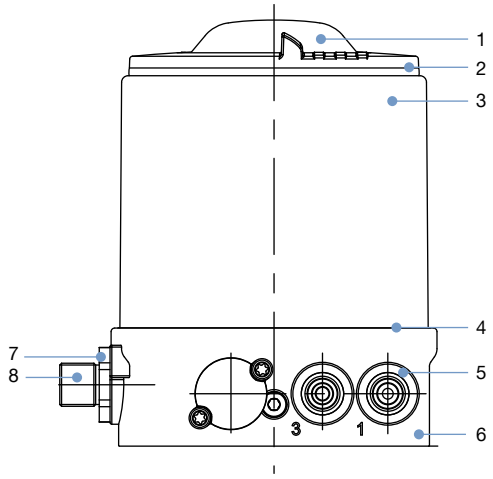

No.	Element	Material
1	Cover	PC
2	Seal	EPDM
3	Outer casing	Stainless steel
4	Seal	EPDM
5	Push-in connector Threaded ports G ⅛	POM/Stainless steel Stainless steel
6	Basic housing	PPS
7	Screws	Stainless steel
8	Plug connector M12	Stainless steel

3. Dimensions

3.1. Mounting on process valve ELEMENT Type 21xx

Note:
Dimensions in mm

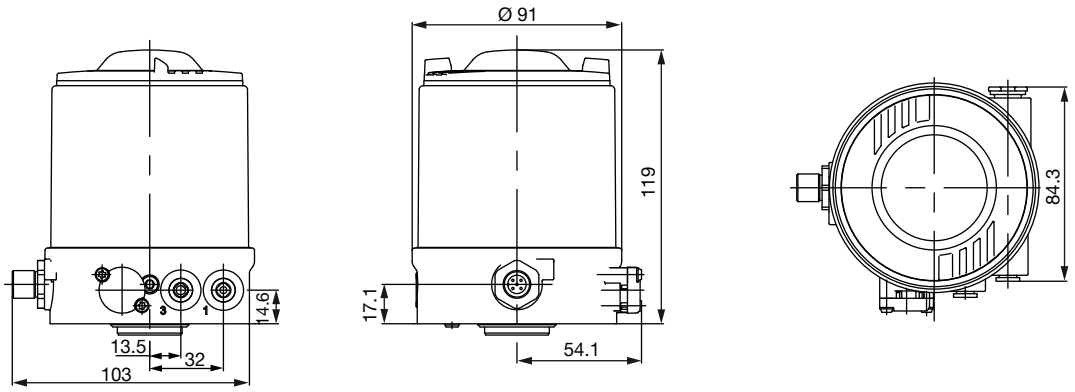

DTS 1000110599 EN Version: Z Status: RL (released | freigegeben | validé) printed: 08.09.2021

4. Device/Process connections

4.1. Electrical connections

Without fieldbus communication 24 V DC

Circular plug M12, 8 pin

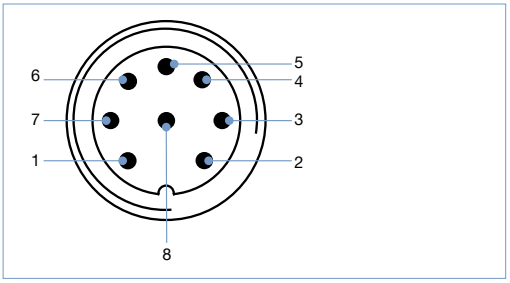

Pin	Description	Pin assignment
1	Limit switches 1	IN 1/TOP
2	Limit switches 2	IN 2/BOTTOM
3	Operating voltage	GND
4	Operating voltage +	24 V DC
5	Valve control +	Valve +
6	Valve control -	Valve
7	–	Not assigned
8	–	Not assigned

Cable gland connection

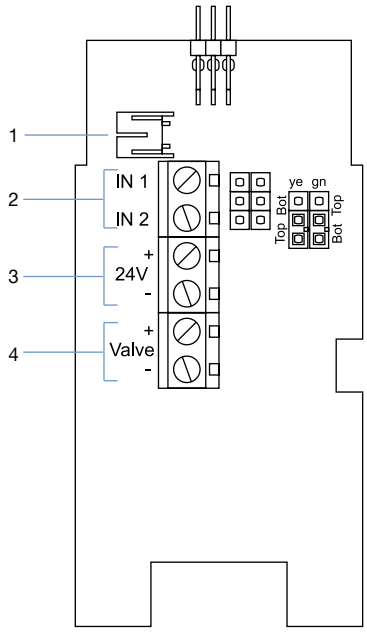

Input signal

Pin	Pin assignment
1	Valve connection
2	Connecting terminals End positions
3	Connecting terminals Supply 24 V DC
4	Connecting terminals Valve (input signal)

DTS 1000110599 EN Version: Z Status: RL (released | freigegeben | validé) printed: 08.09.2021

4.2. AS-Interface connection

M12 circular plug, 4 pin, without external power supply

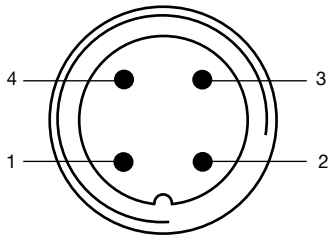

Pin	Description	Pin assignment
1	Bus +	Bus cable AS-Interface +
2	NC (optional)	Not assigned
3	Bus –	Bus cable AS-Interface –
4	NC (optional)	Not assigned

M12 circular plug, 4 pin, with external power supply (on request)

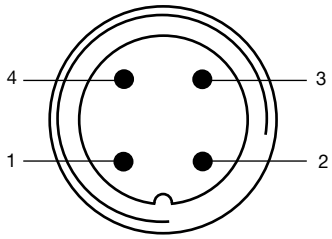

Pin	Description	Pin assignment
1	Bus +	Bus cable AS-Interface +
2	GND (optional)	External power supply
3	Bus –	Bus cable AS-Interface –
4	24 V + (optional)	External power supply

4.3. Bürkert system bus (büS) connection

M12 circular plug, 5 pin

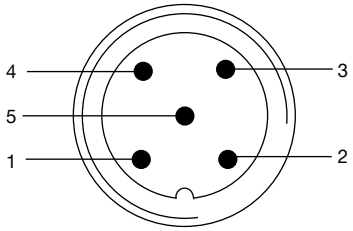

Pin	Description	Cable colour
Supply voltage: 18…30 V DC (büS)		
2	V+	Red
3	V–	Black
Data lines		
1	Drain/Shielding	–
4	CAN_H	White
5	CAN_L	Blue

4.4. IO-Link connection

M12 circular plug, 5 pin

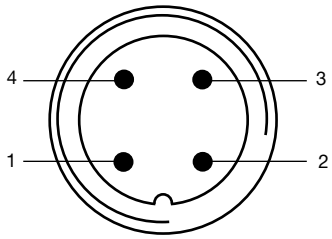

Pin	Description	Pin assignment	
		IO-Link Mode	SIO-Mode
1	L +	24 V DC	
2	I/Q	Not assigned	DI or DO
3	L –	0 V (GND)	
4	Q/C	IO-Link	DI or D0

DTS 1000110599 EN Version: Z Status: RL (released | freigegeben | validé) printed: 08.09.2021

5. Product installation

5.1. Combination options with pneumatic process valves

Note:
A TopControl control valve system consists of a **control head, Type 8691,** and an **ELEMENT process valve, Type 21xx.**

The following information is required to select a complete system:

- **Article no**. of the desired control head, **Type 8691**
- **Article no**. of the selected process valve, **Type 21xx** (see separate datasheet **Type 2100 ▸, 2101 ▸ and 2103 ▸**)

You order two components and receive a completely assembled and tested valve.

Example of for decentralized automation of On/Off ELEMENT valve systems

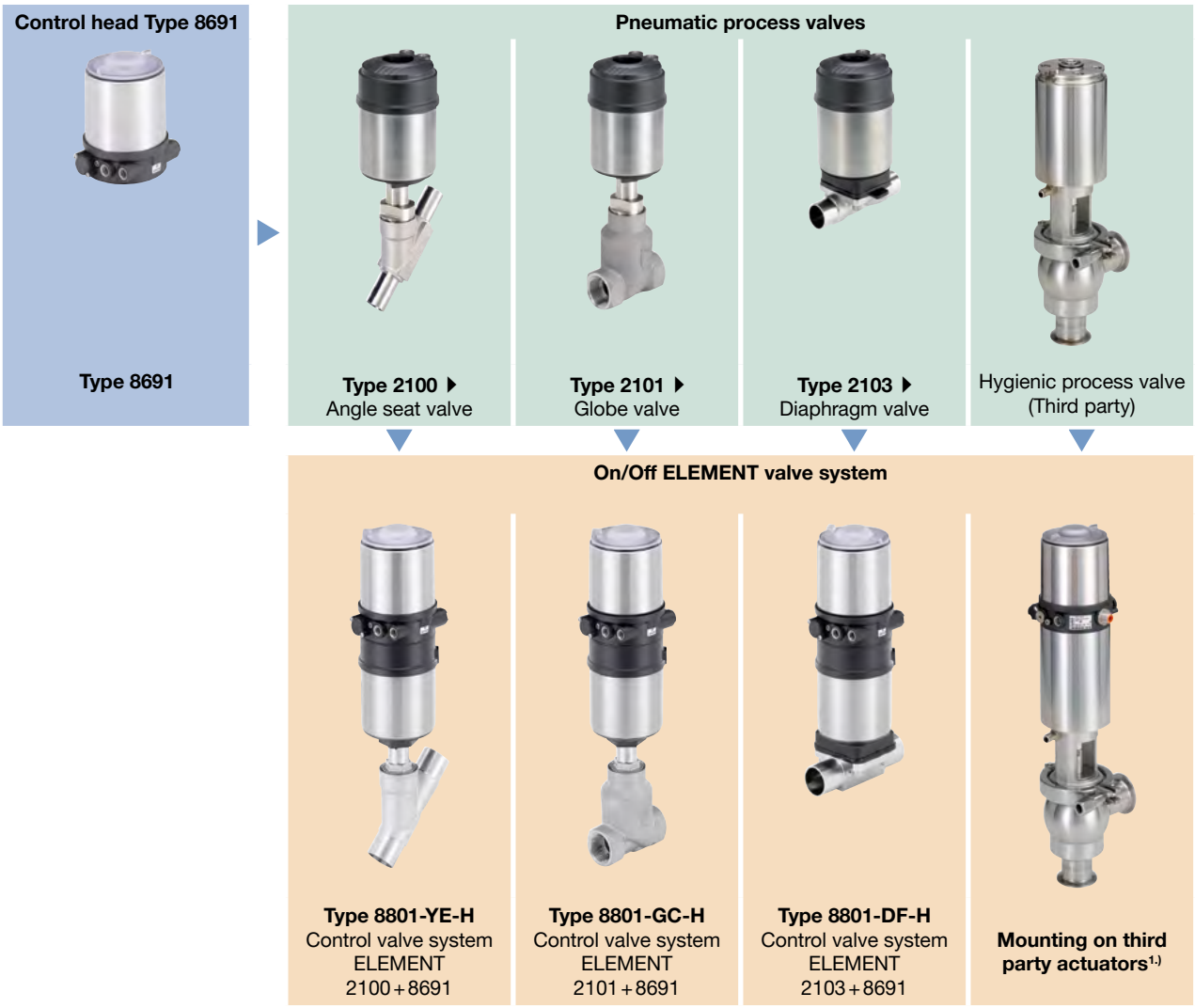

1.) See data sheet **adaptations for third-party actuators, KK01** ▸ or contact the appropriate Bürkert sales office.

DTS 1000110599 EN Version: Z Status: RL (released | freigegeben | validé) printed: 08.09.2021

6. Ordering information

6.1. Bürkert eShop – Easy ordering and quick delivery

Bürkert eShop – Easy ordering and fast delivery

You want to find your desired Bürkert product or spare part quickly and order directly? Our online shop is available for you 24/7. Sign up and enjoy all the benefits.

Order online now

6.2. Bürkert product filter

Bürkert product filter – Get quickly to the right product

You want to select products comfortably based on your technical requirements? Use the Bürkert product filter and find suitable articles for your application quickly and easily.

Try out our product filter

DTS 1000110599 EN Version: Z Status: RL (released | freigegeben | validé) printed: 08.09.2021

6.3. Ordering chart

Note:
Standard versions are UL approved (UL approval IO-Link and büS - Bürkert system bus (büS) in preparation)

Communication	Electrical connection	Circuit function Pilot valve system	Pilot air ports Threaded ports	Article no.	
				Standard	ATEX II Cat. 3G/D, IECEx
AS-Interface Slave profile: S-B.A.E (A/B-Slave, max. 62 Slaves)	M12 circular plug connector	Single-acting	G ⅛	227254	264988
		Double-acting	G ⅛	227240	264975
	M12 circular plug connector/ Flat cable clip/80 cm cable	Single-acting	G ⅛	227258	264990
		Double-acting	G ⅛	227244	264977
IO-Link	M12 circular plug connector	Single-acting	G ⅛	307371	321927
		Double-acting	G ⅛	307368	321925
Bürkert system bus (büS)	M12 circular plug connector	Single-acting	G ⅛	307375	321931
		Double-acting	G ⅛	307373	321929
		Without	G ⅛	307379	321935
Without fieldbus communication	M12 circular plug connector	Single-acting	G ⅛	227262	264992
		Double-acting	G ⅛	227248	264979
		Without	G ⅛	246211	264972
	Cable gland	Single-acting	G ⅛	227260	264991
		Double-acting	G ⅛	227246	264978
		Without	G ⅛	264943	264971

Further versions on request

Additional
büS/CANopen

6.4. Ordering chart accessories

Standard accessories

Description	Article no.
M12 socket, 8 pin with 5 m cable for input and output signals	919267
ASI flat cable clamp with M12 stainless steel socket (spare part)	799646
USB büS interface set (büS stick + connection cable to M12 plug + connection cable M12 to micro USB for the büS service interface) for connection with PC tool Bürkert Communicator	772551
büS cable extension M12, length 1 m	772404
büS cable extension M12, length 3 m	772405
büS cable extension M12, length 5 m	772406
büS cable extension M12, length 10 m	772407
Silencer G ⅛	780779
Sensor Puck (spare part)	682240
Software Bürkert Communicator	**LINK**

Adapter kits

Adapter kits for third-party actuators can be found in the data sheet **Adaptation for third-party actuators, KK01** ▸ or contact the appropriate Bürkert sales office.

Description	Actuator size	Control function	Article no.
Adapter kit for actuator series Type 21xx	Ø 70/90/130 mm	Universal	679917

DTS 1000110599 EN Version: Z Status: RL (released | freigegeben | validé) printed: 08.09.2021

Bürkert – Close to You

For up-to-date addresses
please visit us at
www.burkert.com

DTS 1000110599 EN Version: Z Status: RL (released | freigegeben | validé) printed: 08.09.2021

Credits, © and concept: Christian Bürkert GmbH & Co. KG | Photographs: Marc Eggimann Fotografie - 4051 Basel | Scanner GmbH - Werbeagentur Künzelsau - 74653 Künzelsau